Diesel Engineering

for Advanced Clean Diesel Engines & Vehicles

Contents

Testing and Calibration 4

Vehicle Calibration 6

Aftertreatment Development 8

Control Systems Development 10

About IAV 12

Everywhere you turn, emissions matter

Testing and Calibration

IAV has invested in state-of-the-art engine dynamometer test cells in Northville, Michigan in order to provide customers with the best technology and processes available. Years of experience with IAV's test cells in Germany have been condensed into uniform processes and practices that have been implemented at the new US technical center. This harmonization of processes allows IAV to support global development efforts with a high degree of confidence.

Four test cells have been constructed at the new technical center. One test cell is sized for heavy-duty applications with a maximum power rating of 660 kW, while the remaining three are designed for a power rating of 330 kW. However, one of the light-duty test cells has been sized for high-torque applications such as medium-duty diesel engines or hybrid-electric powerpacks. All cells are fully transient capable with a wide range of instrumentation available for emissions, blow-by and combustion analysis.

To achieve high efficiency and productivity, the dynamometers are capable of fully automated operation around the clock. When combined with IAV's proprietary design-of-experiments tools, this reduces the development time for base engine calibration and delivers high value to customers. Models based on this data are then available for desktop optimization to aid engineers in producing the best possible calibration balancing performance, emissions and NVH.

IAV's new heavy-duty test cell

Calibration is the soul of the vehicle

Vehicle Calibration

Engine calibration on the dynamometer is only half the story in a vehicle development program. Once the engine calibration has been optimized, it is transferred to a pre-production vehicle for further refinement. Vehicle calibration is where the soul of the vehicle is born. The final performance, engine behavior and driver experience take shape through careful calibration of the engine and transmission's dynamic controls. Shifting behavior, launch feeling, pedal response and torque compensation are all modified to meet subjective manufacturer targets.

Emissions performance cannot be ignored during this process, and IAV's engineers are well-versed in the variables that balance performance, economy and low emissions. Changes made to the calibration can also be checked on the desktop with IAV's ModelAnalyzer software to determine the impact on emissions without constant and costly iterations on an emissions-capable chassis dynamometer.

IAV has been providing full diesel vehicle calibrations to customers for the past 25 years, ever since the first electronically controlled diesel passenger car hit the market. These calibrations can be found on the streets of America, Europe and Asia behind the badges of nearly every major automobile manufacturer for every emissions level and OBD requirement. To meet the demands of each market, IAV's engineers have traveled to the coldest, highest and hottest spots available to ensure good performance under all conditions. Available support includes remote analysis of vehicles undergoing durability testing and post-launch field support for mechanical troubleshooting.

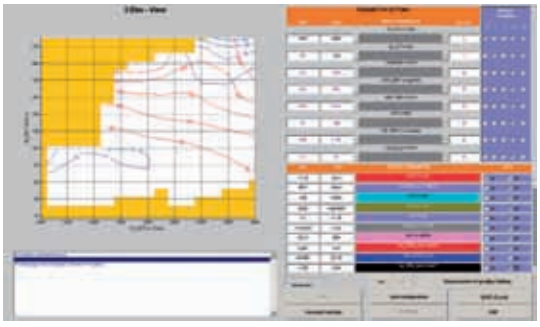

IAV's virtual dyno: ModelAnalyzer

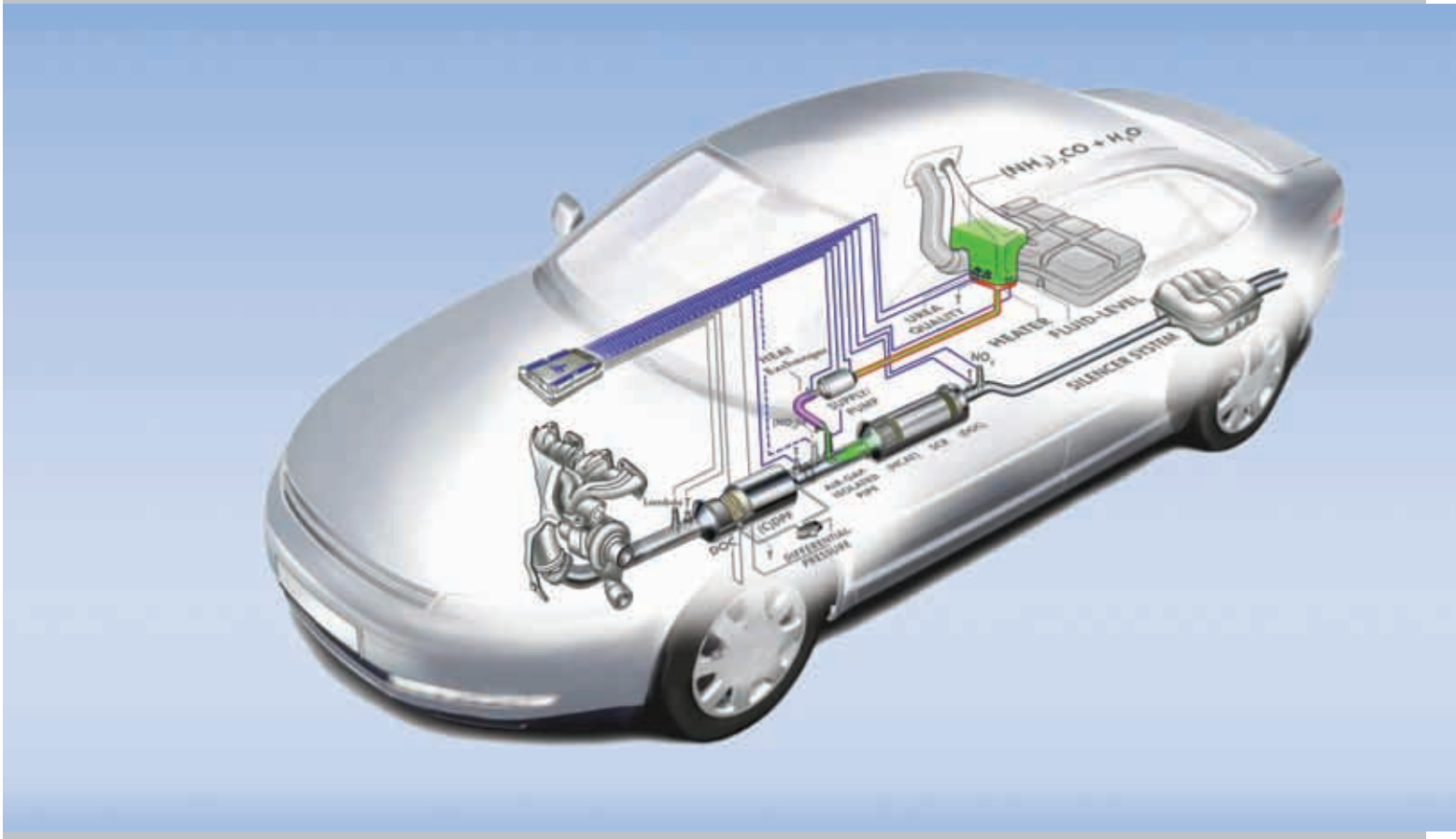

Aftertreatment is a full vehicle experience

Aftertreatment Development

Diesel engines have seen unprecedented reductions in legislated emissions in the past decade, and a large percentage of this reduction has come through the application of advanced catalyst technology. For particulate emissions systems, diesel oxidation catalysts (DOC) and diesel particulate filters (DPF) are the accepted technologies to filter and burn, or regenerate, soot in the exhaust. To treat NO_x, selective catalytic reduction (SCR) and lean NO_x traps (LNT) are the leading technologies. Each of these catalyst technologies are affected by the gas flow conditions within the exhaust system. In turn, the calibration of the engine has a large impact on their performance. IAV understands these interactions and has successfully implemented and calibrated such systems to provide the cleanest diesel vehicles in the world.

IAV's aftertreatment expertise extends to world class techniques for modeling and optimizing potential system layouts before hardware is assembled. Working with Tier1 suppliers and engine manufacturers allows IAV to accurately simulate the behavior of aftertreatment components and recommend modified catalyst loadings to simultaneously improve performance and reduce cost. Multiple physical layouts can be designed, simulated and compared against modeled vehicle emissions cycles to predict the best combination of performance and ease of integration. This approach saves manufacturers time and money over a more traditional design and build process. CFD modeling and low-pressure injector characterization techniques ensure that the hardware designs take best advantage of size and space restrictions. Dispersion of flow throughout an exhaust system can have significant effects on the performance of the catalyst. These tools, in concert with simulation and calibration techniques, ensure that the final product is the cleanest system possible for a given engine.

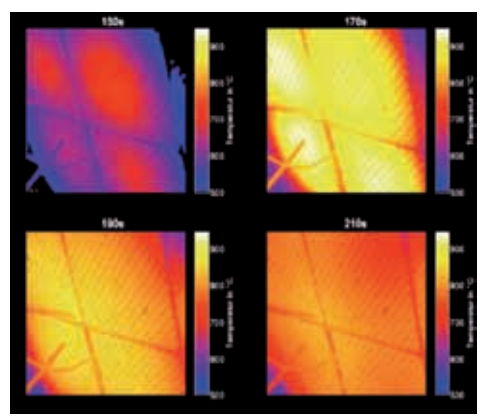

IAV's DPF performance visualization tool

Modern diesel engines require robust controls

Photo courtesy of Detroit Diesel Corporation

Control Systems Development

Advanced combustion and aftertreatment hardware demand advanced controls techniques and processes. Traditional ECU maps and PID controllers are no longer capable of delivering the level of performance required for both low emissions and high fuel economy. IAV has established itself as a leader in the industry for advanced controls and algorithms. The IAV process begins with accurate system models of the engine that allow for very rapid algorithm debugging, concept validation and desktop calibration. Performing these steps in simulation saves significant time before the process is moved to the dynamometer for final validation.

The modern air system on a diesel engine can include multiple turbochargers, air coolers, exhaust-gas-recirculation systems and even throttles. Working through the complex interactions of these systems and the governing actuators can be a daunting task, but IAV has developed advanced model-based systems that ease the management of this complexity and provide a more logical calibration environment. The key to the system is the effective modeling of the mass flow throughout the air path and the use of this to correctly pre-control the relevant actuators. This allows for very aggressive amounts of EGR and low NO_x while maintaining the performance that customers demand. These advanced controls also extend to the aftertreatment system, where lower DPF regeneration times and increased SCR conversion efficiencies become possible.

As the future unfolds, control of the diesel engine will move inside to the cylinder itself, where measured information can better control the air and fuel system with precise instructions for optimum low-emissions combustion. IAV has demonstrated this concept through internal research and has now seen the first applications reach production while meeting the toughest emissions standards in the marketplace.

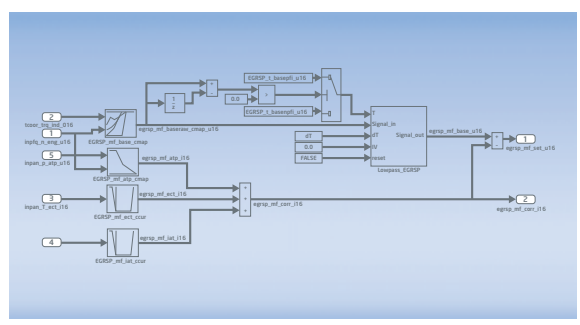

Algorithm development at IAV

IAV's new Technical Center North America

About IAV

IAV Group is a leading global automotive engineering service provider, employing more than 3,000 personnel throughout Europe, Asia and the Americas. Founded in 1998 as the North American subsidiary of IAV GmbH, IAV Automotive Engineering Inc. develops breakthrough concepts and technologies – from powertrain design and development to controls and electronics – for future vehicle generations. Clients include leading automotive manufacturers and component suppliers, all of whom rely on the knowledge of IAV's engineers to help them design and develop some of the industry's most advanced engines and powertrains. The IAV Technical Center North America is now open in Northville, MI. The technical center includes four state-of-the-art development/test cells. With this exciting new facility, engineering capabilities have expanded to include full service projects, further cultivating the inventive spirit, enthusiasm and commitment to success for which the IAV Group is known.

Excellence in automotive research and development – a concept IAV applies across the globe

Subject to change without notice, effective: M 03/2009

IAV Automotive Engineering Inc. · 15620 Technology Drive · Northville, MI 48168 · USA · Tel. +1 734 233-3300 · Fax +1 734 233-3320 · info@iav.com · www.iav.com

Excellence in Automotive Research & Development

IAV Inc.
Automotive Engineering